http://www.daz3d.com/forums/viewthread/3381/

**Rashad Carter**, Posted: 03 July 2012 01:43 PM

## HOW TO USE THE INSTANCING LAB IN BRYCE 7.1 PRO/ A complete tutorial

The Instancing Lab in Bryce 7.1 Pro is a mysterious but powerful new tool. With this tool new levels of complexity are possible, Nature is complex, and for a natural looking landscape complexity is a must. So how do we use this new tool?

For this tutorial we will paint instances onto the Ground Plane.

1. Create a New Scene.
2. Create a Cube Primitive at world center.
3. Select the Ground Plane. The Ground Plane is your target object. Instances will be drawn onto this Ground Plane.
4. Press the letter “I” to enter the Instancing Lab. It is located just below the letter “M” that takes you to the Materials Lab.
5. Now we can get started. These steps below coincide with the images attached to the end of this post….

1. When you enter the IL, the first thing you should do is go to the “Brush Editor.”
2. In the Brush Editor screen, you need to select the Brush Component (the item that will be copied). You can select multiple items if needed. In this case select the cube you created just before you entered the IL.
3. Once you select the item, you need to mouse click one time onto the pie chart, this ensures the IL knows which item you want to edit parameters upon.
4. You can then assign rotation and scaling variations as needed.
   NOTE: Rotation does not work with grouped objects. Groups require some special tricks for several reasons. More on that later.
5. Once you are happy with the parameters in the Brush Editor, you can then go to the “Painter” screen.
6. Here in the Painter screen, you will assign values to the paint brush itself. There are several considerations and tips about how to paint.
   a. The more polygons in the original, the more virtual polygons in the subsequent copies. Therefore, high polygon items cannot be copied as many times as low polygon items due to some limits on total polygons allowed.
   b. Imported meshes use more memory than primitives typically, but not always.
   c. Try to avoid continuous brush strokes, as this will paint too many instances into too small an area wasting memory. I have found that it is best to use brush dabbles instead. Does dabbling make sense? Is “dabble” the word I’m looking for?
   d. Sometimes you can find upon rendering that the instances can appear to be arranged in a grid, not nearly random enough even at high randomness brush settings. The solution is to alter the size of your brush every once in a while. It makes a much more natural and random looking result. Another option is to alter your zoom because just like brush size it will help create a more random result.
   e. Be careful with Randomness settings. Too much Randomness and you’ll find multiple some instances crammed into virtually the same spot. This is bad

because now you are planting three trees where only one should be planted, wasting memory. The instances should not stack up on top of one another if its avoidable.

f. Try to keep the Density setting modest as well in most cases, as this will allow more control.

NOTE: Keep the Task Manager open while you paint. Watch how the memory usage increases. Here is a fact, the true memory usage is 300-400% more than what is being displayed at the moment of painting. You will find that when you save and then reopen this scene that the actual memory used is about 350% more than it appeared to be before you saved the file. This is often why out of memory warnings occur far below the 1.5 gb range.

Press ALT while painting to align the instances with the target normals. This is ideal for painting onto a sphere for example.

7. When you are happy, exit the Instancing Lab.

8. Now Bryce will stall temporarily, as it generates the wire frame for all those new instances. For this reason it is best to paint in shifts, and not paint everything at once as to do it all in a single action can overload the undo buffer.

   NOTE: Bryce navigation gets very slow when there are a lot of instances in a scene. The reason is that Bryce does not have multiprocessor support for navigation, it only uses multiple cores for rendering. Due to the virtual geometry there is an increased processing demand during navigation but it is all ported through a single core, resulting in quite slow navigation. In some situations it can take 30 seconds or more for even simple navigation changes such as camera position or lab entry or exits to occur. For this reason it is wise to plan ahead and to test many situations to learn how to use the IL with greatest efficiency. This hopefully will change when Bryce is made 64 bit. Hoping!!!

   I will describe the exact slowness you will experience. After a change is made, the mouse cursor will go into spinning mode for the first time. It will then stop spinning. but in a moment you observe the dial starts spinning again. After the second spin, you then notice that the Nano Preview is finally updating. Only after both dial spins are complete and the Nano has updated is the computer actually finished implementing the most recent change. If by accident you think the computer is ready for more changes after only the first dial spin, and you press on something it will delay the already delayed reaction. One must be quite patient indeed. It is best to save the instance painting until the end of the scene construction.

   Saving also gets very slow. But reopening is relatively fast.

9. The resulting instances will be in a group called Unnamed. That group is Linked to the original target. So if you were painting onto the ground plane, the Unnamed group is linked to that ground plane. If you were to change the position of the ground plane the resulting instances would follow.

10. Next you must select Unnamed and ungroup it. It will take a few moments. It is essential to ungroup Unnamed.

11. Once ungrouped, then regroup them. This too will take a few moments.

12. In the Attributes for the new group, name the group and select “Show as Box.” Remember that now the group is no longer linked to the Ground Plane. If you need it to be then reassign it. Exit Attributes.

13. You will see that the wire frame view is now greatly simplified, all of the detail has been replaced by a single box. Navigation speeds back up significantly, but there is still some degree of slowness.

In the next post I will discuss groups and other issues.

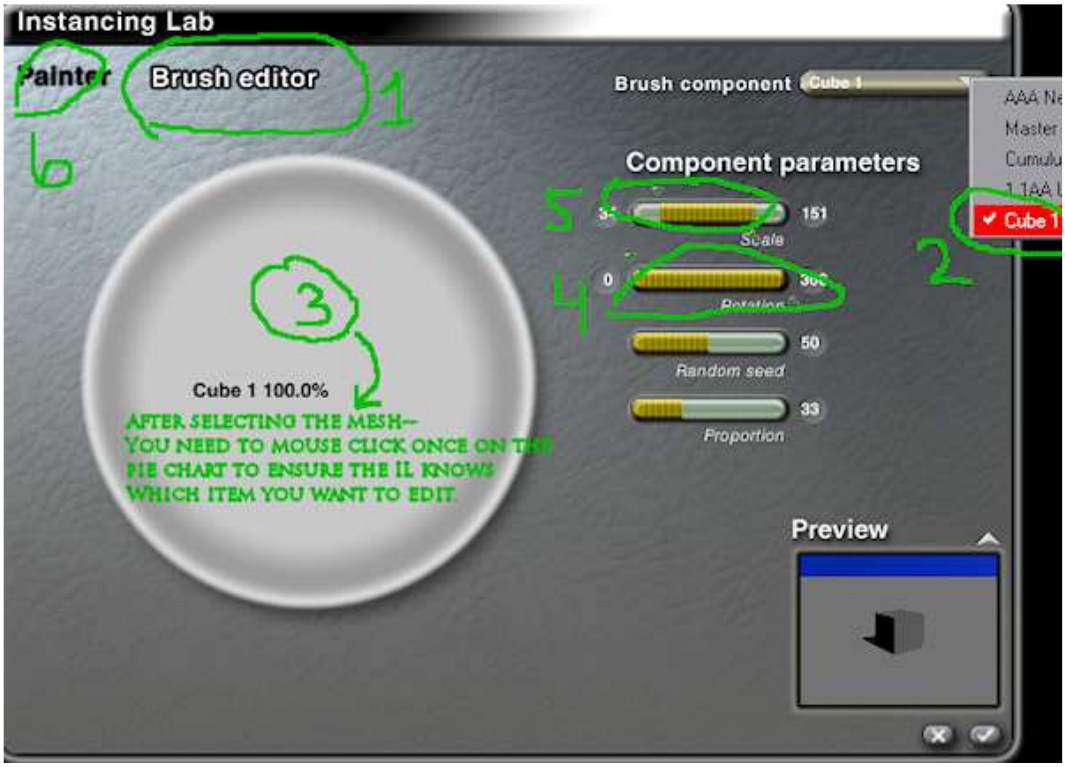


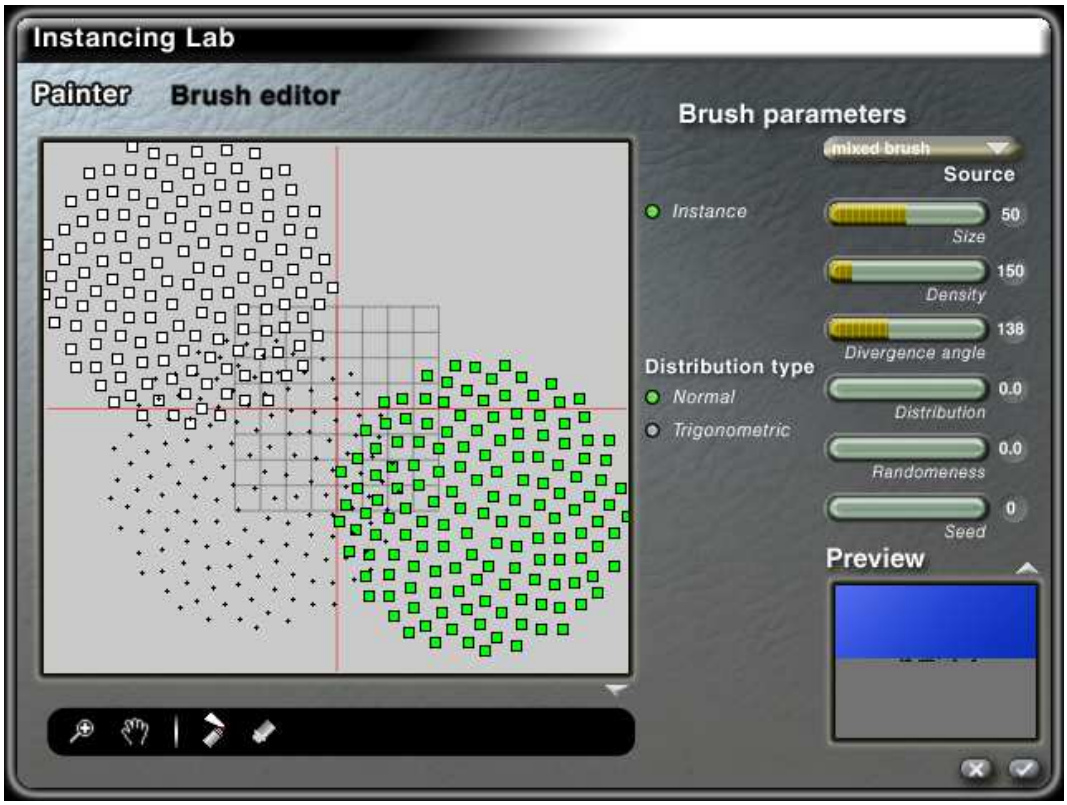

Posted: 03 July 2012 05:24 PM

As mentioned above, there are a couple of issues related to instancing Primitives and Grouped objects.

## Memory

There are potential problems with memory. The IL (Instance Lab) does not truly “Instance” Grouped Objects nor Primitives, it merely “Replicates” them, potentially consuming large amounts of memory. There is an important distinction between a true instance and a mere duplicate/replicate. I will explain it as best I understand it.

A true “Instance” is like a place holder. It simply tells the computer that there is an object of some sort placed at this location. The object at this location has no specific attributes. The difference is that when the rendering engine needs the geometry information for this instanced object, it is told to reference a “source” geometry that is stored in memory. This means that the geometry for many objects can be stored in memory only once and shared thousands of times, saving vast resources allowing much more geometric complexity within a scene.

Mere Replications and Duplications are not as efficient as true Instances. A replication or a duplication stores the geometry of each copy as unique. If you place 100 duplications the geometry will be stored in memory 100 times consuming memory at an alarming rate. Again, with true instancing the geometry would be stored only once. In this case duplications and replications are actually new originals, related to the source only in that they once shared the same properties at the time of replication.

Visually in wire frame view an Instance will be drawn with a “dotted line” approach, while true geometry such as duplications are represented with solid lines.

For this reason memory will run out very quickly when painting copies of high poly complex grouped objects. In the case of individual primitives, they are generally low in polygons anyhow so they don’t really need to be instanced in the way imported meshes do. Complex Boolean primitive based objects however might have some problems being instanced lots of times. it all depends on the situation.

## Solution to Memory Problem

When it comes to imported meshes as groups, such as content imported from Daz Studio, there is a means to trick the Instance Lab into truly instancing these grouped objects. It turns out that one can make a duplicate of an Instance.

What does that mean? First, let's demonstrate what happens if you do try to paint a grouped object directly from the IL without implementing the little trick.

1. For this next lesson, instead of painting a single cube primitive as we did before, lets create a group comprised of two rounded cube meshes from the Additional Primitives listing. Stack one on top of the other and group them.
2. Select the Ground Plane and Enter the Instance Lab via the letter "I." Select the group of rounded cubes as the source and paint a few copies onto the Ground Plane. Exit the IL.
3. When you observe the wire frame you will see the new objects are drawn with a solid line. This proves the items were merely duplicated, not truly instanced. The memory used here is much more than we desire.
4. Delete these false instances by selecting Unnamed and deleting it.
5. Now we get to the trickery. Do the following.
   a. Select the original source group of rounded cubes. Ungroup them, but keep both parts selected. While still selected, go to the top left and Select Edit from the drop down menu.
   b. After you instance the selected items, group your newly instanced objects and name the group "Trickery."
6. Select the ground plane, enter the IL and select "Trickery" as your source. Paint a few copies of trickery onto the ground plane then exit the IL.
7. You will see that the resulting instances are indeed instances drawn with the dotted line. Hurray, now you are painting groups!

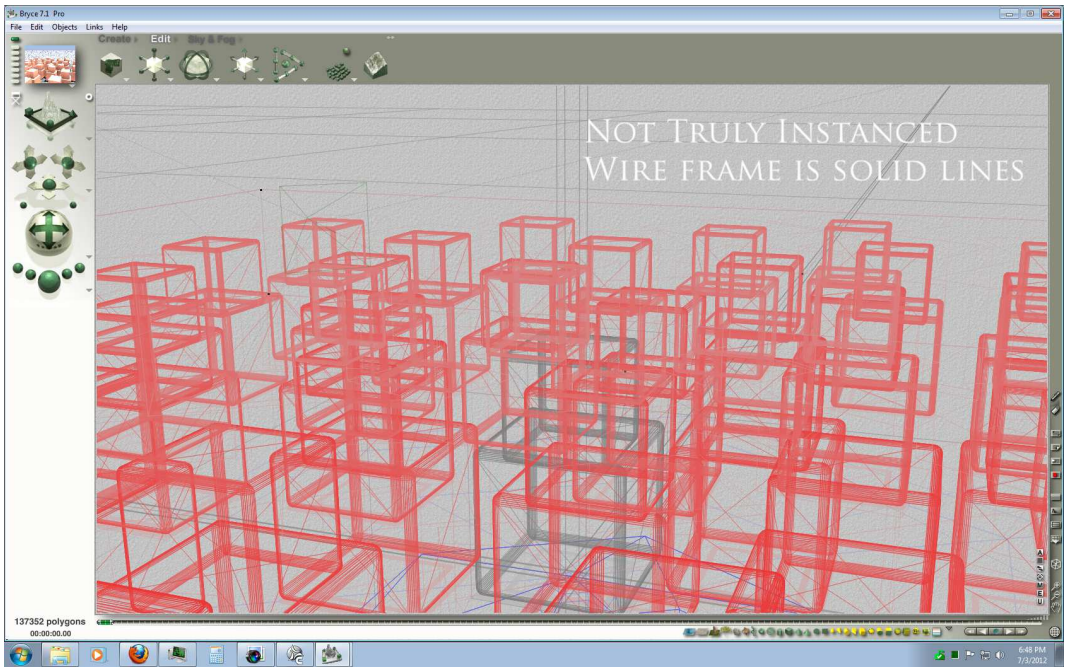

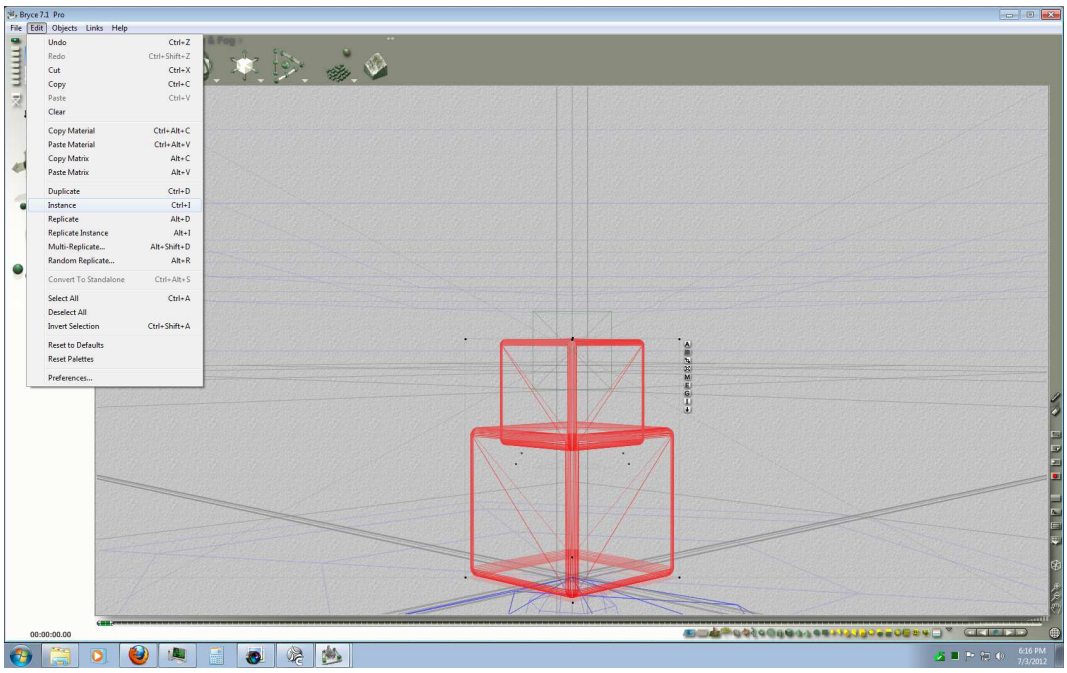
Bryce 7.1 Pro
File Edit Objects Links Help
Undo Ctrl+Z
Redo Ctrl+Shift+Z
Cut Ctrl+X
Copy Ctrl+C
Paste Ctrl+V
Clear
Copy Material Ctrl+Alt+C
Paste Material Ctrl+Alt+V
Copy Matrix Alt+C
Paste Matrix Alt+V
Duplicate Ctrl+D
Instance Ctrl+I
Replicate Alt+D
Replicate Instance Alt+I
Multi-Replicate... Alt+Shift+D
Random Replicate... Alt+R
Convert To Standalone Ctrl+Alt+S
Select All Ctrl+A
Deselect All
Invert Selection Ctrl+Shift+A
Reset to Defaults
Reset Palettes
Preferences...
00:00:00.00

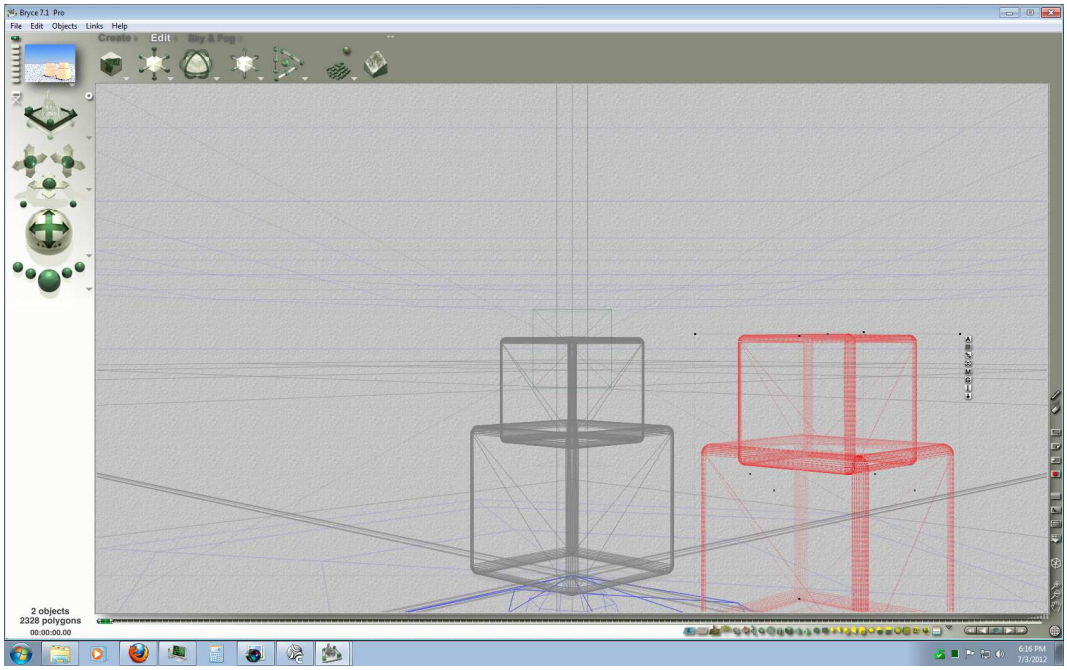
Bryce 7.1 Pro
File Edit Objects Links Help
Create Edit Sky & Fog
2 objects
2328 polygons
00:00:00.00

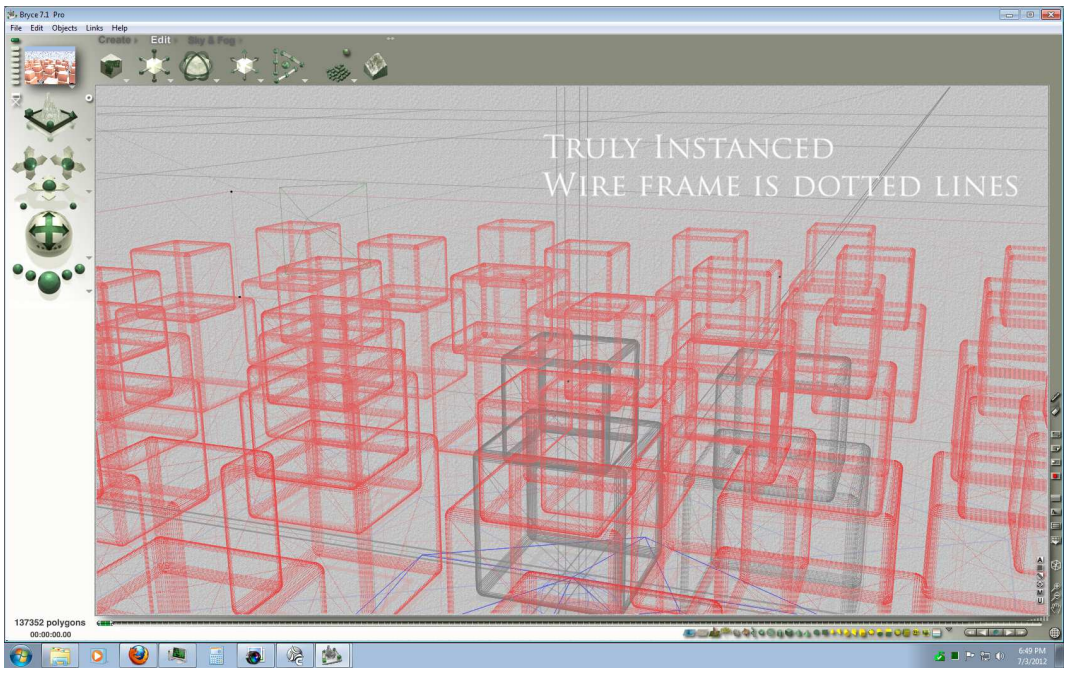


The next post will deal with rotations of grouped objects.

Posted: 03 July 2012 08:58 PM

## Rotation

The other problem is that the IL does not rotate grouped objects. The solution is simply to make rotated instanced originals and paint them as individual items as below.

Lastly remember to press ALT while painting to align the instances with the vertex normals of the target. Notice how the trees are painted onto the sphere.

Here are a few final tips to start you on your way:

1. Use short names. Longer names are not properly displayed in the IL.
2. Make sure to Save often and to save each file with a unique name. Don't copy over a good save with a bad one, then you will lose everything.

FUN FUN

http://www.daz3d.com/forums/viewthread/3381/
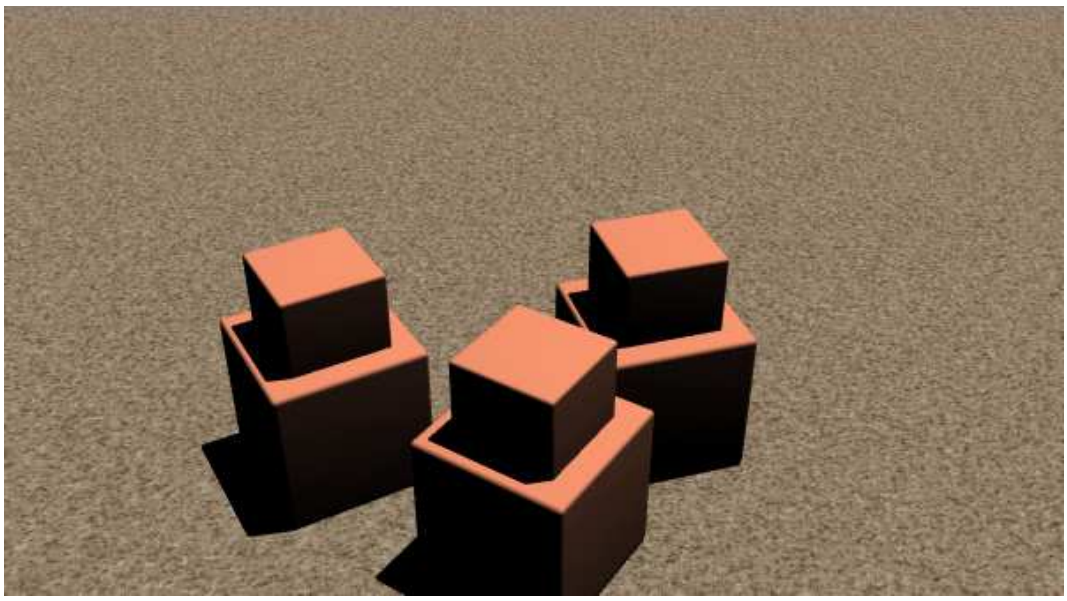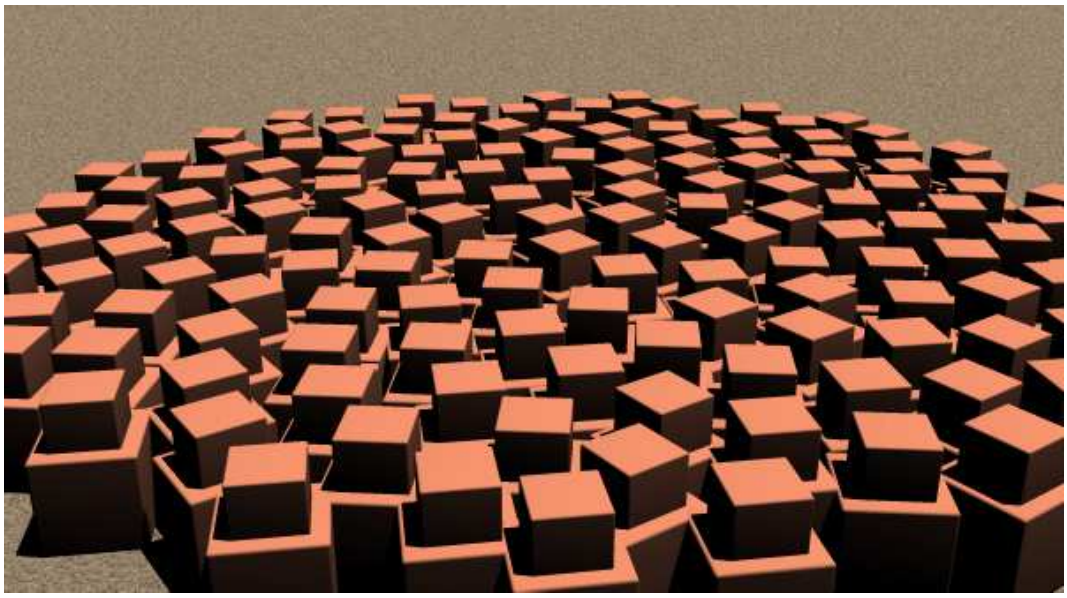
**Rashad Carter**